ITEM NO.	PR No.	DESCRIPTION	QTY.
1	0214P152	PiranhaVac GEN-2- ASF Portable Container	1
2	0214P153	PiranhaVac GEN-2- ASF Sign 250X150MM	1
3	0214P015 *	PiranhaVac - Connection Hose Assembly	1
4	0214P001 *	Customer Interface Valve - DN50	1
5	0214P002 *	Customer Interface Valve - DN50 - Rubber Elbow 90°	1
6	0214P067 *	Power Cord C13 to UK BS1363 2m	1
7	0214P151 *	VOLEX - X-210705A - Power Cord, USA To IEC - 2m	1
8	0214P154	PiranhaVac GEN-2- ASF Portable Conatiner - Caution Sign	1

NOTE : * DENOTES GENERIC COMPONENTS SUPPLIED WITH THE PIRANHAVAC GEN-2 (PART # 0214P120)

DRAWING No: 0214P150	Rev. A-01
-BREAK ALL EDGES 0.5 x 45°	
-ALL DIMENSIONS IN mm UNLESS OTHERWISE STATED.	
-UNSPECIFIED TOLERANCES ON DIMENSIONS: 0 ± 2.0; 0.0 ± 1.0; ∠ ± 0.5°	
DO NOT SCALE IF IN DOUBT ASK	ALL DRAWING ERRORS TO BE REPORTED TO THE D.O

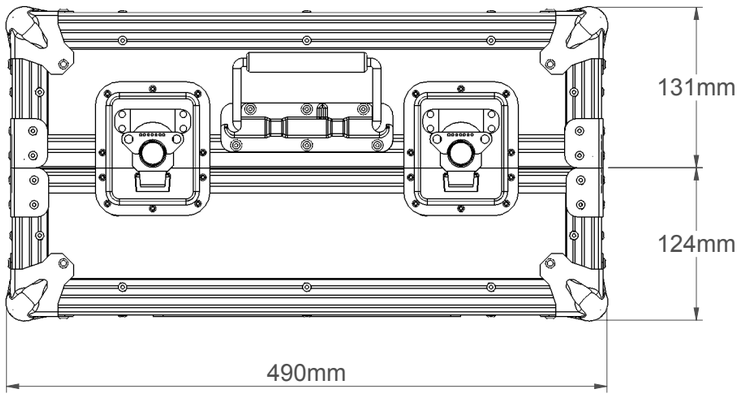

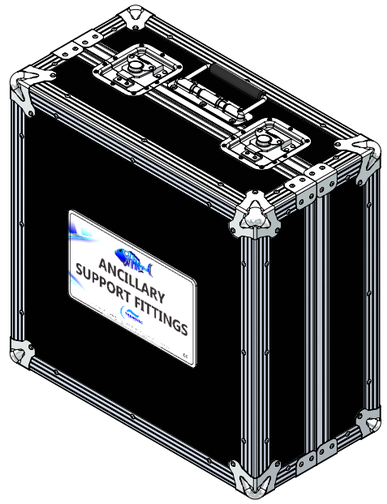

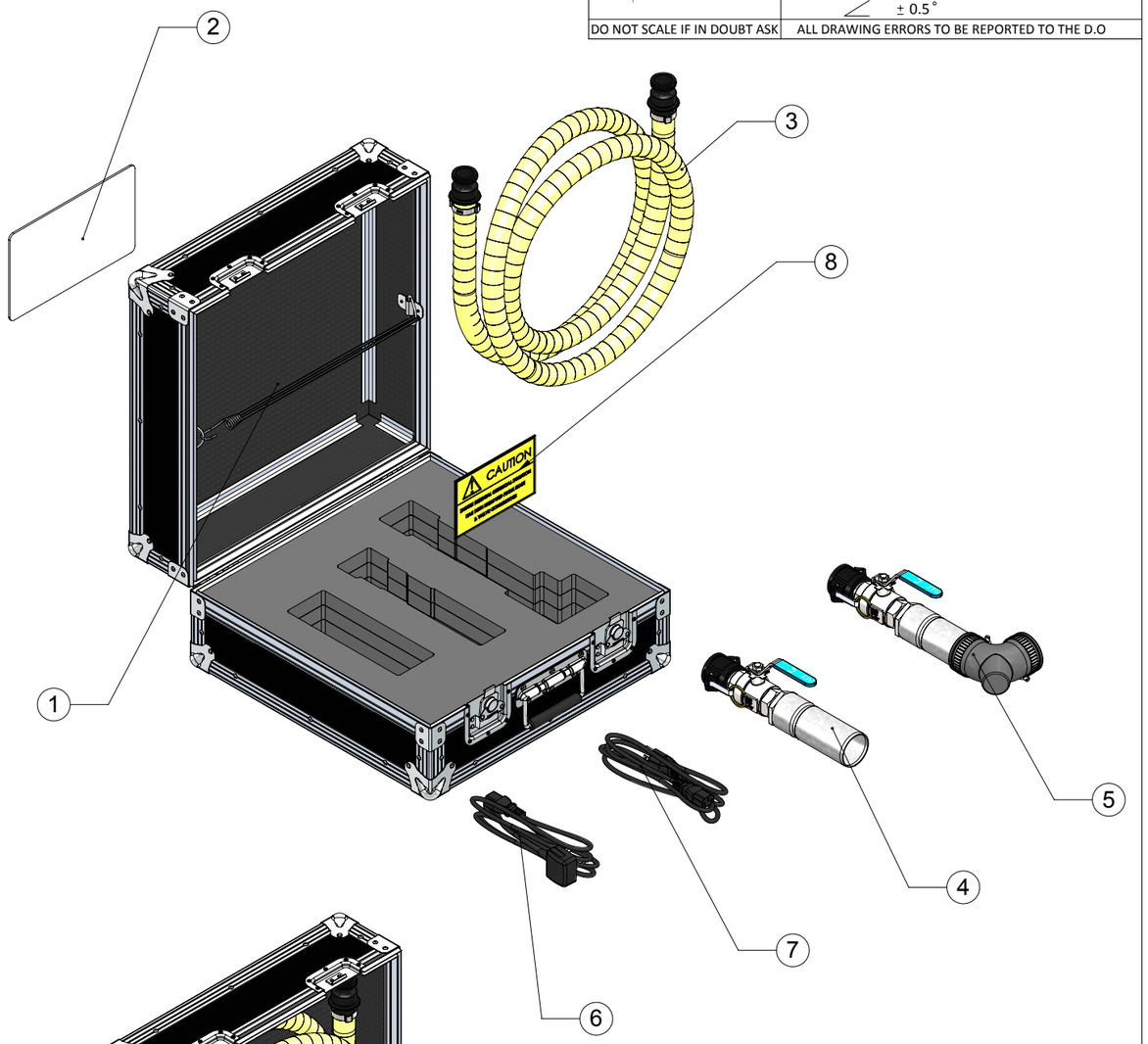

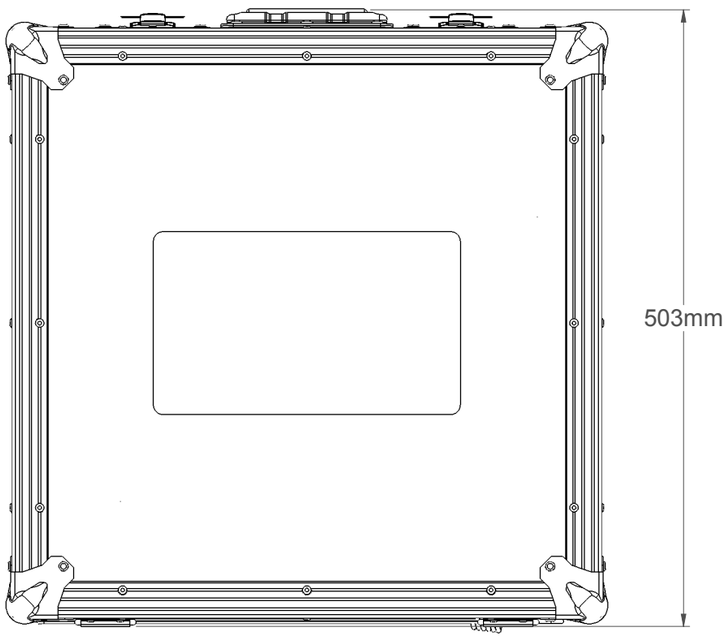

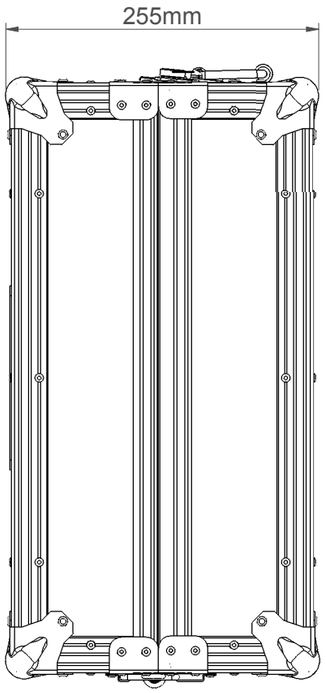

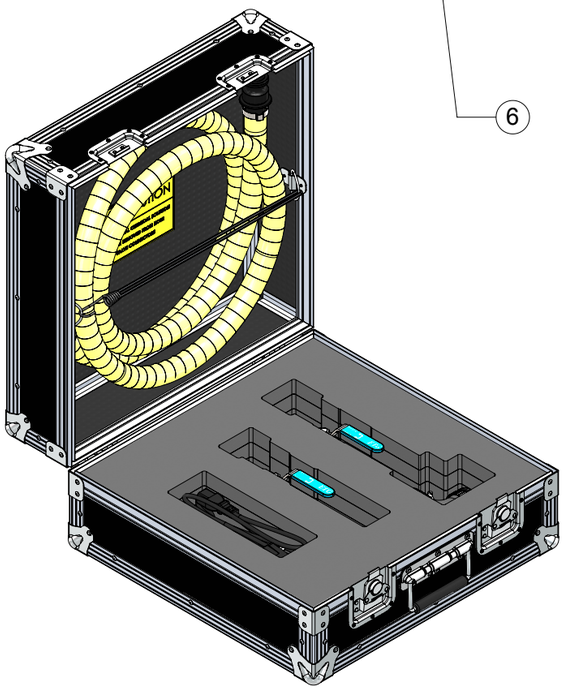

DRAWN BY	: A.Weir	DATE	:	15/09/2014
MODIFIED BY	: A.Weir	DATE	:	29/10/2014
ENGINEERING	: Dave Abbott	DATE	:	
SALES	: Simon Chapman	DATE	:	23/09/2014
CLIENT APPROVAL	:	DATE	:	
APPROVED	:	DATE	:	

TRANSVAC Environmental Systems

INTERNATIONAL MARINE AGENTS, STOCKISTS AND DISTRIBUTORS
TRANSVAC SYSTEMS
MARLOWE HOUSE, UNIT B, RUDFORD INDUSTRIAL ESTATE,
FORD, ARUNDEL, WESTS SUSSEX, BN18 0BF, ENGLAND.
Tel: +44 (0) 1903 736900
Fax: +44 (0) 1903 731569

THIS DRAWING IS PRIVATE AND CONFIDENTIAL,
AND IS NOT FOR SALE NOR CAN IT BE LOANED.
IT MUST NOT BE COPIED OR OTHERWISE REPRODUCED OR
COMMUNICATED TO ANY PERSON WITHOUT PERMISSION.

APPROX WEIGHT(Kg)	: 32.327	Sheet: 1 OF 1
FINISH	:	Sheet Size: A3
SPECIFICATION	:	REV: A-01
MATERIAL	: SEE DRAWING	
CLIENT	:	
TITLE	: PiranhaVac GEN-2- Ancillary Support Fittings (ASF) Assembly	
DRAWING No.	: 0214P150	